(12) INTERNATIONAL APPLICATION PUBLISHED UNDER THE PATENT COOPERATION TREATY (PCT)

(19) World Intellectual Property Organization
International Bureau

(43) International Publication Date
21 January 2021 (21.01.2021)

WIPO | PCT

(10) International Publication Number
WO 2021/010848 A1

(51) International Patent Classification:
H01R 13/514 (2006.01)

(21) International Application Number:
PCT/PL2020/000061

(22) International Filing Date:
16 July 2020 (16.07.2020)

(25) Filing Language: Polish

(26) Publication Language: English

(30) Priority Data:
P.430642 17 July 2019 (17.07.2019) PL

(72) Inventor; and
(71) Applicant: **ZIELIŃSKI Krzysztof** [PL/PL]; óul. Szeroka 26, PL-27-500 Opatów (PL).

(81) Designated States *(unless otherwise indicated, for every kind of national protection available)*: AE, AG, AL, AM, AO, AT, AU, AZ, BA, BB, BG, BH, BN, BR, BW, BY, BZ, CA, CH, CL, CN, CO, CR, CU, CZ, DE, DJ, DK, DM, DO, DZ, EC, EE, EG, ES, FI, GB, GD, GE, GH, GM, GT, HN, HR, HU, ID, IL, IN, IR, IS, IT, JO, JP, KE, KG, KH, KN, KP, KR, KW, KZ, LA, LC, LK, LR, LS, LU, LY, MA, MD, ME, MG, MK, MN, MW, MX, MY, MZ, NA, NG, NI, NO, NZ, OM, PA, PE, PG, PH, PL, PT, QA, RO, RS, RU, RW, SA, SC, SD, SE, SG, SK, SL, ST, SV, SY, TH, TJ, TM, TN, TR, TT, TZ, UA, UG, US, UZ, VC, VN, WS, ZA, ZM, ZW.

(84) Designated States *(unless otherwise indicated, for every kind of regional protection available)*: ARIPO (BW, GH, GM, KE, LR, LS, MW, MZ, NA, RW, SD, SL, ST, SZ, TZ, UG, ZM, ZW), Eurasian (AM, AZ, BY, KG, KZ, RU, TJ, TM), European (AL, AT, BE, BG, CH, CY, CZ, DE, DK, EE, ES, FI, FR, GB, GR, HR, HU, IE, IS, IT, LT, LU, LV, MC, MK, MT, NL, NO, PL, PT, RO, RS, SE, SI, SK, SM, TR), OAPI (BF, BJ, CF, CG, CI, CM, GA, GN, GQ, GW, KM, ML, MR, NE, SN, TD, TG).

Published:
— *with international search report (Art. 21(3))*
— *before the expiration of the time limit for amending the claims and to be republished in the event of receipt of amendments (Rule 48.2(h))*

(54) **Title:** MOBILE DEVICE CASE EXTENDING DEVICE THROUGH NEW FUNCTIONALITIES

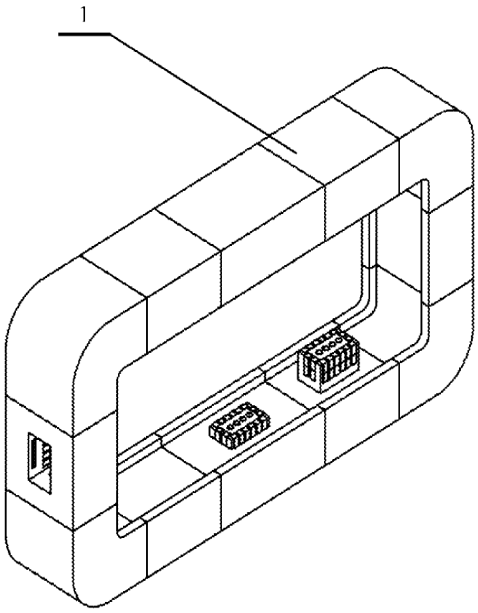

FIG. 1

(57) **Abstract:** This invention relates to an extension frame for mobile devices (1) such as phones, tablets, laptops or other similar devices, consisting of removable multi-purpose modules (2), (3), (4), (5), (6), (7), (10) and (11) with socket- (8) and plug-type (9) connections, in which two screens are housed in on opposite sites: a touch display (12) and a photovoltaic display (13), which are designed to obtain solar energy to charge the device batteries.

WO 2021/010848 A1

Mobile device case extending device through new functionalities

This invention relates to an extension frame for mobile devices consisting of connecting modules, to be built in a rim manner inside the frame, of touch screens for phones, tablets, laptops and other similar screens, including TV screens and the latest generation of translucent and transparent screens such as solid planes or flexible films that are controlled, managed and communicated – as a complete whole – through touch, voice, vision and thought.

The state of the art for this invention comprises the following technical solution from the patent description US2005213762: a modular cryptographic device and a connection method as well as the following technical solutions from the patent description US2019037061: a modular device and a connection method as well as a number of other solutions which form part of the state of the art, none of which relates to the present solution.

The first solution relates to an attachable communication module and the second one to a module for additional accessories to the complete set; neither of them achieves the object of the invention, either as an embodiment of this invention or other follow-up and classified methods x, y, and z

The essence of the invention is that a frame of any extensions, configured by the manufacturer or the user himself, consists of target modules for different destination, a PCB motherboard, a SUB board, processors, internal storage, antennas, batteries, GPS, cameras, audio, vibrations, buttons, input and output connectors and other classified x, y and z, which – once combined into a closed rim on any screen such as a display and a touch panel or other classified x, y and z – make up a frame that comprises them and forms – together with that screen or screens – a complete mobile device that can, at any time, be reconstructed and extended to include other new and unknown modules and screens to configure the same and replace damaged modules and screens.

In other words, the frame configured using the modules connects and communicates with one or two screens placed on opposite ends within the frame, giving users unlimited opportunities to build new mobile devices or replace both a single module and a screen independently and with new modules and screens that will be developed in the near future according to the inventions of the same inventor.

Preferably, the frame consists of four corner modules, each equipped with two sockets, and of short and long connecting modules with two plugs for connection and transmission, as well as of circumference solidifications around its finite circumference, and each of these solidified modules is designed to contain a mounting recess for two solidified screens or any other devices in order to configure – with or inside the frame – displays and touch screens or transparent displays, or screens and photovoltaic panels and other classified x, y and z

Preferably, the frame may additionally consist of short modules with three plugs or with two plugs and a socket, or with a plug pressed into the housing and with all items of this kind in its finite connection.

Preferably, the frame may additionally consist of long modules with two plugs and a socket on the outside of the frame.

Preferably, the frame solidified and configured as stated above consists of and comprises within a typical phone with an additional screen panel consisting of photovoltaic cells to charge the phone battery.

The subject of the invention is shown in the following drawing in which fig. 1 shows a frame consisting of all possible short modules, fig. 2 – a disassembled frame consisting of short modules with visible sockets and plugs, and fig. 3, 4, 5, 6, 7, 8, 9 and 10 – a detailed illustration of short modules, and fig. 11 – a frame consisting of long modules with two pre-assembled screens, and fig. 12 – a frame consisting of long modules with a screen and a typical phone before assembly and before connecting the sockets with plugs.

The beneficial effects of the done invention are the following: the option to build mobile phones, tablets, laptops and other mobile devices using standardised parts and to any configuration, both for the market and to individual client specifications, and to further expand or replace the damaged or unreliable modules as removable parts.

The invention can be widely used in the electronics industry and to meet basic human needs. It marks a new and promising manufacturing trend in this sector, providing users with unlimited opportunities to further develop both the new methods and the devices themselves.

Claims

1. The extension frame for mobile devices **characterised in that** it consists of multi-purpose modules for various uses comprising within: PCB motherboards, SUB boards, processors, internal storage, antennas, batteries, GPS, cameras, audio, vibrations, buttons, input and output connectors, and other classified (x), (y) and (z), which – once combined into a closed ground ring on any screen (12) and (13) in the form of a display and a touch panel or other classified (x), (y) and (z) – make up a frame (1) that comprises them and forms – together with these screens (12) and (13) – a complete mobile device that can, at any time, be reconstructed and extended to meet current needs and include new applications (x), (y) and (z).

2. The frame according to claim 1, **characterised in that** it consists of four corner modules (2) equipped with two sockets (8) and short modules (4) and long modules (7) with two plugs (9) with a mounting recess (15) for two solidified screens (12) and (13), where the first screen (12) functions as a display and a touch panel and the second one (13) as a photovoltaic material.

3. The frame according to claim 1, **characterised in that** it consists of additional short modules (3) with two sockets (8) and/or short modules (5) with three plugs (9) and/or short modules (6) with two plugs (9) and a socket (8) and/or modules (10) with a plug pressed into the housing (9)

4. The frame according to claim 1, **characterised in that** it consists of additional long modules (11) with two plugs (9) and a socket (8) outside the frame (1) for connection to external and other devices

5. The frame according to claim 1, **characterised in that** the frame (1) solidified and configured as stated above consists of and comprises inside its and in a mounting recess (15) a typical phone (14) with an additional screen (13) serving as a photovoltaic material or having other unknown uses

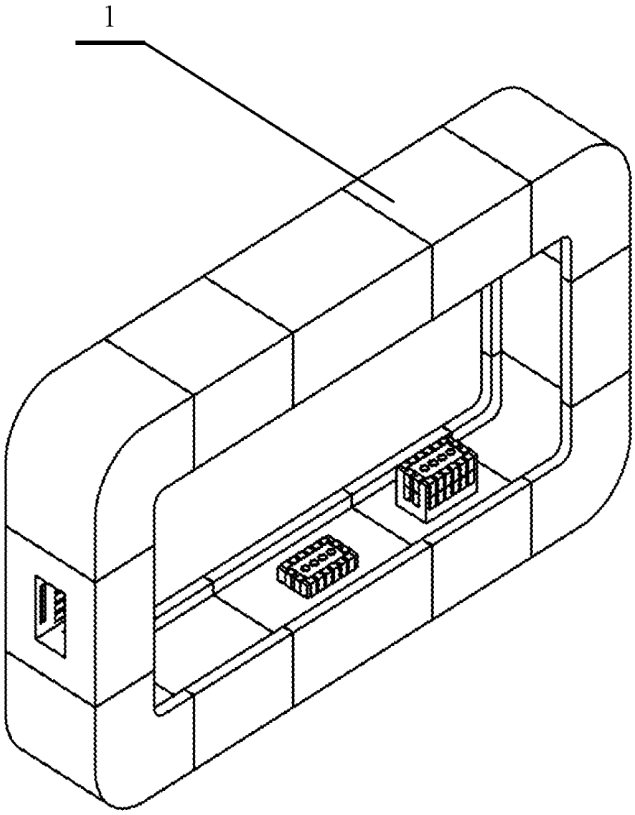

FIG. 1

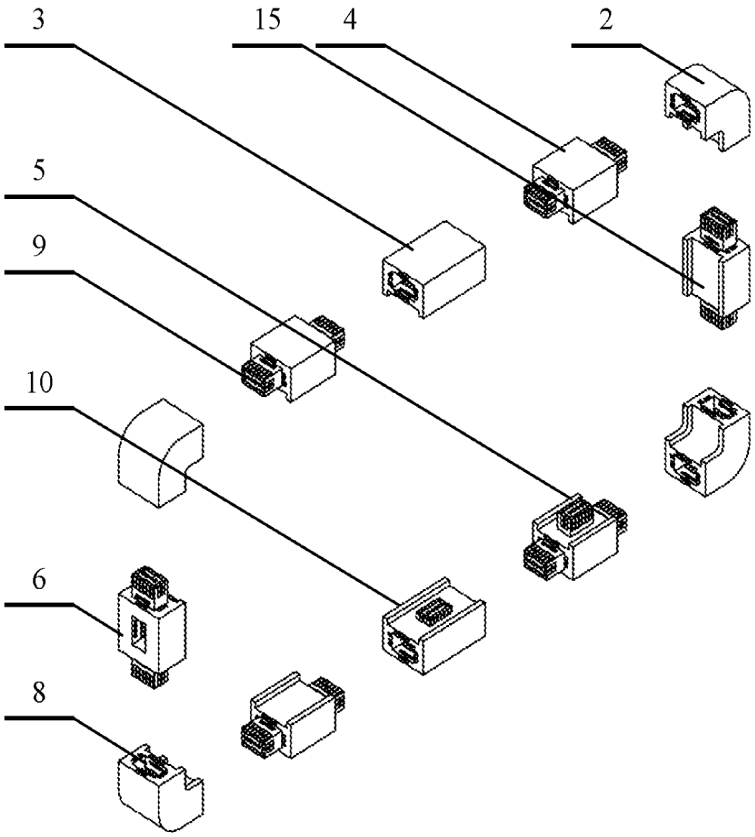

FIG. 2

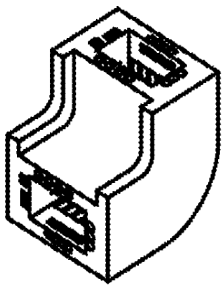

FIG. 3

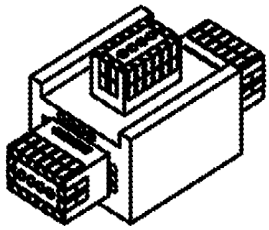

FIG. 4

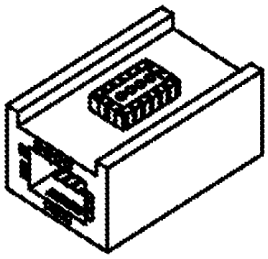

FIG. 5

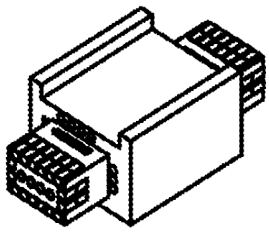

FIG. 6

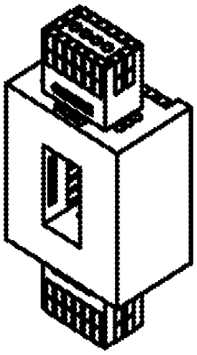

FIG. 7

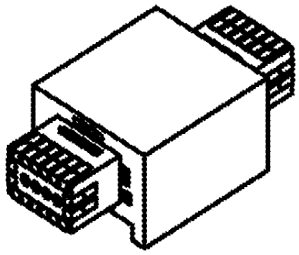

FIG. 8

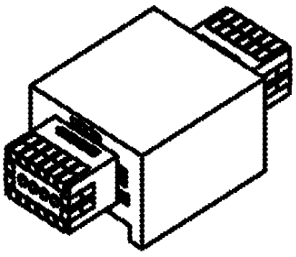

FIG. 9

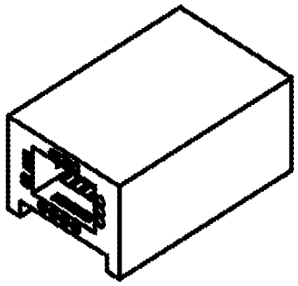

FIG. 10

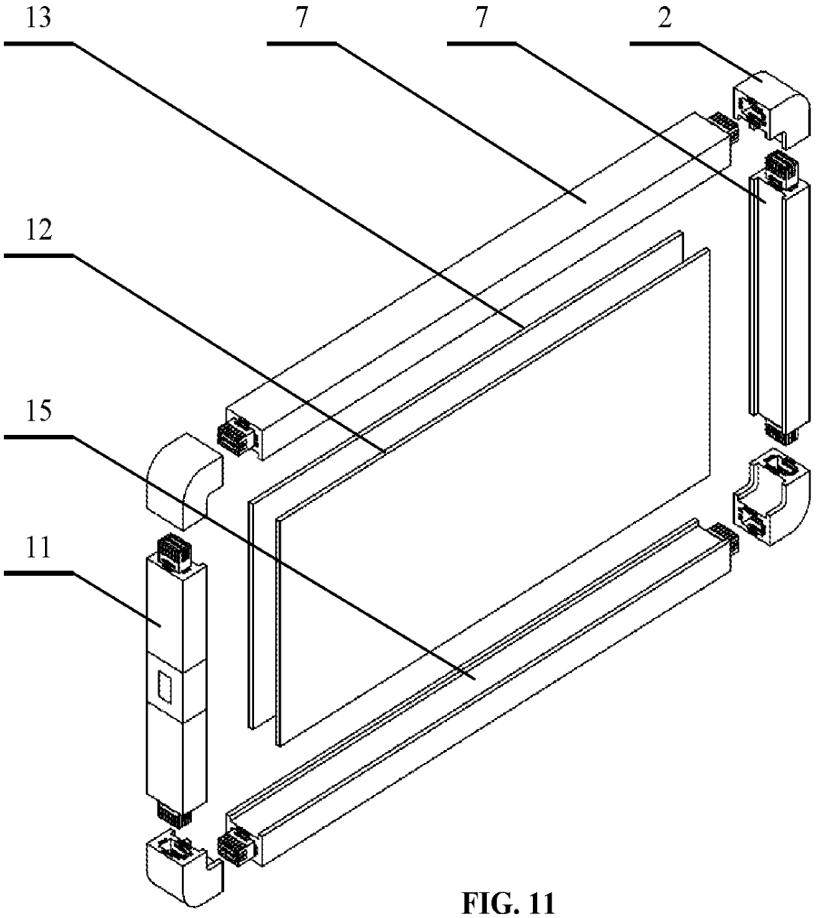

FIG. 11

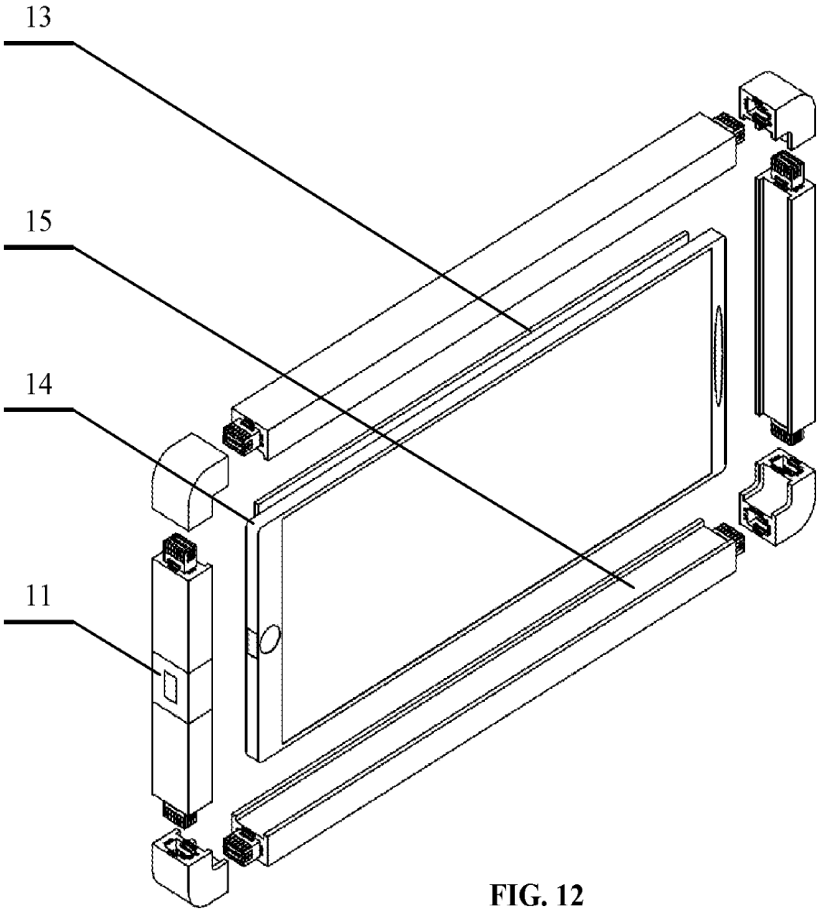

FIG. 12

INTERNATIONAL SEARCH REPORT

International application No.
PCT/PL2020/000061

A. CLASSIFICATION OF SUBJECT MATTER
H01R 13/514

According to International Patent Classification (IPC) or to both national classification and IPC

B. FIELDS SEARCHED

Minimum documentation searched (classification system followed by classification symbols)
H01R 13

Documentation searched other than minimum documentation to the extent that such documents are included in the fields searched

Electronic data base consulted during the international search (name of data base and, where practicable, search terms used)

PPO database, EPODOC

C. DOCUMENTS CONSIDERED TO BE RELEVANT

Category*	Citation of document, with indication, where appropriate, of the relevant passages	Relevant to claim No.
Y	CN205248575 U (JIANGMEN CITY XINHUI DISTR YANTAI ELECTRONIC CO LTD) 2016-05-18, fig. 1-2, desc. [0009]	1-5
Y	CN207022059 U (HANGZHOU LAIBU TECH CO LTD) 2018-02-16 desc. [0035], fig. 1	1-5
Y	CN106453824 A (JIANG LINGFENG) 2017-02-22 desc [0063] fig. 1	1-5
Y	CN105611001 A (ZHOU LIYING) 2016-05-25 fig. 1	1-5
Y	CN202042779 U (SHANGHAI HUAQIN TELECOM TECH) 2011-11-16 fig. 2-5	1-5
Y	CN207397265 U (BOKCORE TECH CO LTD) 2018-05-22 fig. 2	1-5

☐ Further documents are listed in the continuation of Box C. ☒ See patent family annex.

* Special categories of cited documents:
"A" document defining the general state of the art which is not considered to be of particular relevance
"E" earlier application or patent but published on or after the international filing date
"L" document which may throw doubts on priority claim(s) or which is cited to establish the publication date of another citation or other special reason (as specified)
"O" document referring to an oral disclosure, use, exhibition or other means
"P" document published prior to the international filing date but later than the priority date claimed
"T" later document published after the international filing date or priority date and not in conflict with the application but cited to understand the principle or theory underlying the invention
"X" document of particular relevance; the claimed invention cannot be considered novel or cannot be considered to involve an inventive step when the document is taken alone
"Y" document of particular relevance; the claimed invention cannot be considered to involve an inventive step when the document is combined with one or more other such documents, such combination being obvious to a person skilled in the art
"&" document member of the same patent family

Date of the actual completion of the international search	Date of mailing of the international search report
09 Dec 2020 (09.12.2020)	09 Dec 2020 (09.12.2020)

Name and mailing address of the ISA/	Authorized officer
Visegrad Patent Institute / Branch Office PL Al. Niepodległości 188, 00-950 Warsaw, Poland	Arkadiusz Kwapisz
Facsimile No. +48 22 579 00 01	Telephone No. +48 22 579 06 10

Patent document cited in search report	Publication date	Patent family member(s)	Publication date
CN205248575U	2016-05-18	CN205248575U	2016-05-18
CN207022059U	2018-02-16	CN207022059U	2018-02-16
CN106453824A	2017-02-22	CN106453824B	2019-12-10
CN105611001A	2016-05-25	None	None
CN202042779U	2011-11-16	CN202042779U	2011-11-16
CN207397265U	2018-05-22	CN207397265U	2018-05-22